Datasheet

Torque Transducer

EVL

27 torque ranges from ±0 - 0,02 Nm up to 20.000 Nm
precise measurement of torque, speed
and angle of rotation



Option base

Alternative fastening option,
enables simplified attachment!
Easy to assemble!

Alignment in the longitudinal axis using a keyway,
oriented and unmistakable installation
(for example after recalibration)
by means of parallel pins

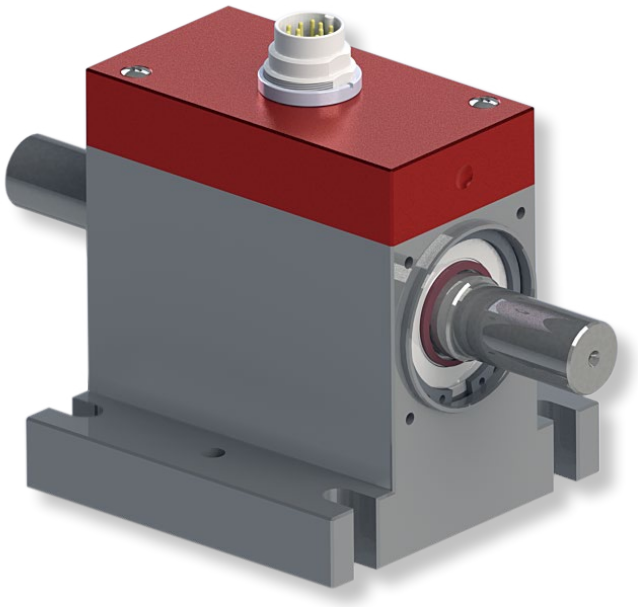

Accessories mounting adapter

Precise peak height adjustment
to a desired level.
Hole pattern is the same as option with foot.

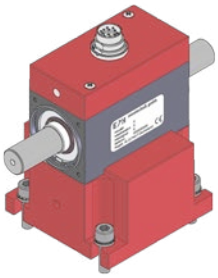

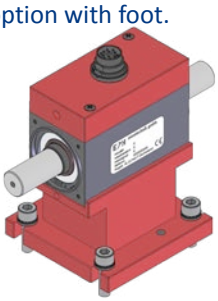

Features EVL

- contactless signal transmission
- integral signal amplifier
- low moment of inertia
- speed/RPM measurement (optional)
- Angle of rotation measurement (optional)
- Advanced electromagnetic compatibility (EMC)
- adjustable output level for speed- and angle signal (5 - 24 V)
- larger speed range for speed- and angle measurements
- Frequency output 10 kHz ± 5 kHz (RS422)
- larger input voltage range (10 - 28,8 V)
- compact dimensions, universally applicable
- Strain gauge technology
- Option base
- Option mounting adapter
- 0.05% linearity error option

Series EVL torque transducers are suitable for lab and industrial applications because of their small size and multiple mounting options. As supply voltage and output signal are transmitted without contact, the device can operate continuously with low wear and no maintenance.

These transducers are also available with optional speed and angular measurement for a host of applications. The integrated signal amplifier is powered with 10 - 28,8 V DC and outputs an electrically isolated analog signals of 0 ± 10 V and 10 kHz ± 5 kHz

The standard version has smooth shaft ends, several types are available with optional keyways (see table).

Standard delivery with factory calibration

Electrical Specifications EVL

Supply voltage:	10 - 28,8 V DC	
Power consumption:	at Ub 12 V approx. 180 mA (switching converter 2.2 W)	
Rise time 10-90 %:	2 ms (optional 400 µs)	
Limit frequency -3 dB:	200 Hz (optional 1 kHz)	
	Voltage output:	Output frequency:
Voltage output:	0 ± 10 V	10 kHz ± 5 kHz (RS422)
Resolution:	16 bit ≙ 0,38 mV	16 bit ≙ 0,19 mHz
Max. output range:	± 11 V	± 6,3 KHz
Internal resistance:	100 Ω	–
Ripple:	< 100 mVss	–
Nonlinearity/max. measurement error (of full scale)		
DRVL:	0,15 % (optional 0,1 %)	0,15 % (optional 0,1 %)
DRVL-I to DRVL-VI:	0,1 % (optional 0,05 %)	0,1 % (optional 0,05 %)
Hysteresis	0,1 %	0,1 %
Deviation at zero point:	≤ 50 mV	≤ 50 Hz
Operating temperature:	0 - 60 °C	
Compensated temperature range:	5 - 45 °C	
Temperature error		
Zero point:	0,02 % / K	
Sensitivity:	0,01 % / K	
Mechanical overload:	100 %	
Internal protection:	IP40	
Connection:	12pin-connector (circular connector series 680)	

Interference emission

Basic standard	Frequency range
EN55011 Limit class B	150 kHz - 6 GHz

Immunity to interference

Basic standard	Testing accuracy	coupling	Result
EN61000-4-2:2009 Electrostatic discharge (ESD)	4 kV	direct	A
EN61000-4-2:2009 Electrostatic discharge (ESD)	4 kV	indirect	A
EN61000-4-3:2009 Electromagnetic fields	10 V/m	indirect	A
EN61000-4-4:2009 Bursts	2 kV	indirect	A
EN61000-4-5:2005 Surge voltages	1 kV	direct	B
EN61000-4-6:2009 Conductor-borne RF disturbances	10 V/m	indirect	A
EN61000-4-8:2005 Power frequency magnetic fields	30 A/m	indirect	A

A: Deviation of outputs during the test < 0.3 % of full scale
B: Deviation of outputs during the test > 0.3 % of full scale

	Speed option (n)	**Angle option (w)**
Max rev.:	37.000 min^{-1} * depending on size	20.000 min^{-1} *
Output:	TTL or over voltage on pin 5 V < U < 24 V	
Impedance:	22 Ω	22 Ω
I_{max}:	20 mA	20 mA
Pulses/rev.:	60	2 x 360
Resolution:	--	1°
Phase shift:	--	Channel A 90° at right spin of propulsion side

* The values are valid for test cables ≤ 10 m, the maximum permissible speed of the sensor must be observed.

Mechanical Dimensions EVL

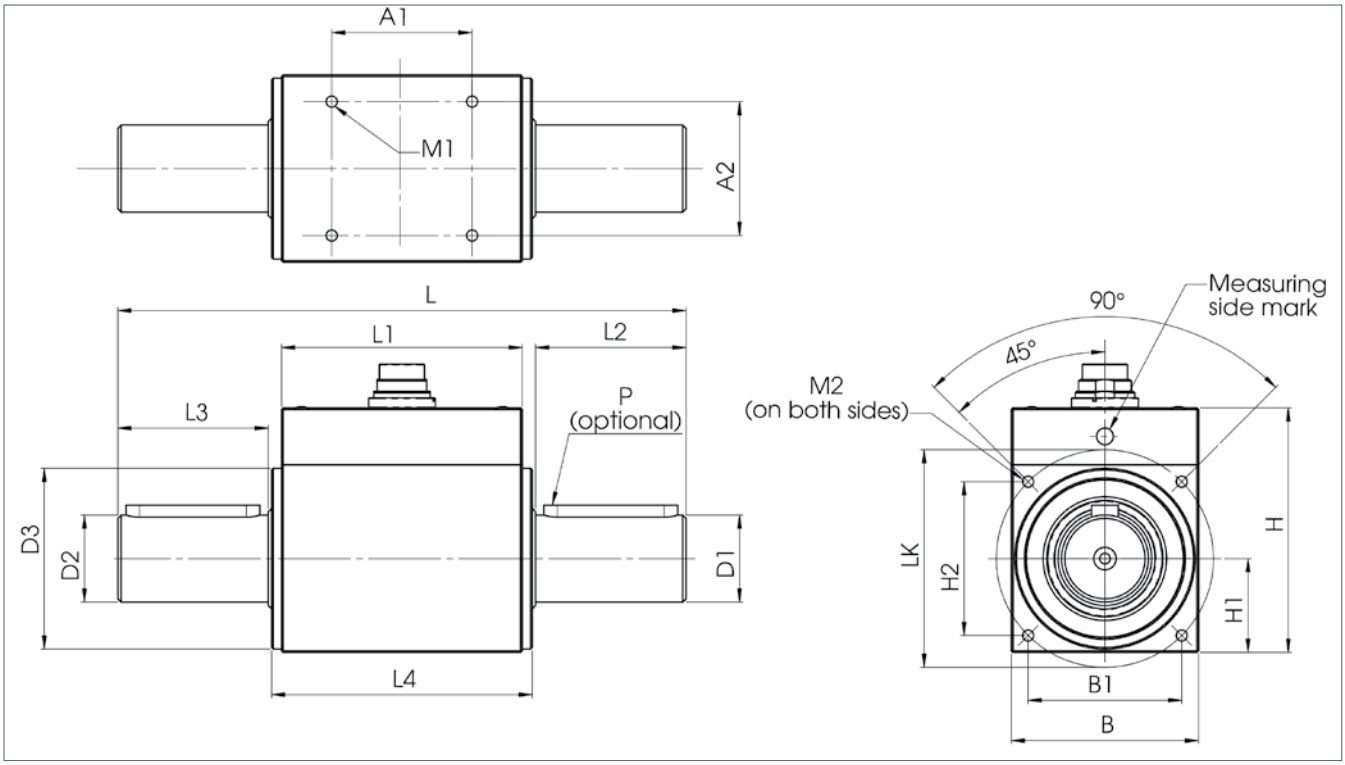

Model	EVL	EVL-I		EVL-Ib	EVL-II	EVL-III	EVL-IV	EVL-V	EVL-VI
Torque	0.02	0.05	2	1	5	50	500	2000	10.000
Ranges	0.05	0.1		2	10	100	1000	3000	15.000
(±0 - ... Nm)	0.1	0.2		5	20	150	1300	4000	20.000
		0.5		10	30	200	1500	5000	
		1			50	300			
Dimensions:					(other ranges upon request; General tolerances DIN 2768-m)				
L (mm)	82	89	95	110	145	170	270	320	355
B (mm)	32	28		36	42	56	88	105	168
B1 (mm)	24	(→ LK)		(→ LK)	(→ LK)	(→ LK)	(→ LK)	(→ LK)	--
H (mm)	47	54		58	58	73	104	121	185
H1 (mm)	14	14		18	21	28	44	52,5	84
H2 (mm)	22	(→ LK)		(→ LK)	(→ LK)	(→ LK)	(→ LK)	(→ LK)	--
Ø D1 g6 (mm)	3	8	8	10	15	26	45	70	110
Ø D2 g6 (mm)	3	5	6	10	15	26	45	70	110
Ø D3-0,1 (mm)	15	27		32	38	54	80	--	--
Ø LK ± 0,1 (mm)	(→ B1/H2)	32		38	46	65	98	--	--
L1	63	62		68	79	72	84	95	121
L2	7,5	11	14	18	30	45	85	110	115
L3	7,5	10	14	18	30	45	85	110	115
L4	67	66		72	83	78	90	--	--
A1	50	40		56	60	42	46	75	91
A2	24	22		24	32	40	70	85	138
M1	M2,5 x 5 deep	M3 x 5 deep		M3 x 6 deep	M3 x 6 deep	M4 x 8 deep	M6 x 12 deep	M8 x 16 deep	M10x16 deep
M2	M2,5 x 5 deep	M3 x 6 deep		M3 x 6 deep	M3 x 6 deep	M4 x 8 deep	M6 x 12 deep	--	--
P (DIN 6885) optional	--	--		2xA3x3x14	2xA5x5x25	2xA8x7x40	4xA14x9x80	4xA20x12x100	--
Weight (g)	200	170		340	600	1300	4500	11 500	33.000
n max (min^{-1})	20 000	37 000		26 000	19 000	13 500	7900	6300	4000

Technical Specifications EVL

Model	Torque range (± 0 - ... Nm)	Spring constant C (Nm/rad)	Mass moment of inertia J (g•cm²)			Rated axial load (N)*	Rated radial load (N)*
			total	Drive side	Measuring side		
EVL	0,02	8	7	7	0,1	35	30
	0,05	8	7	7	0,1	35	30
	0,10	8	7	7	0,1	35	30
EVL-I	0,05	25	10	10	0,2	105	2
	0,1	40	10	10	0,2	140	3
	0,2	40	10	10	0,2	140	3
	0,5	80	10	10	0,3	160	4
	1	80	10	10	0,3	210	7
	2	213	10	10	0,4	210	13
EVL-Ib	1	250	29	24	5,5	630	10
	2	250	29	24	5,5	630	10
	5	710	29	24	5,6	725	25
	10	1319	30	24	5,9	725	50
EVL-II	5	955	98	65	32	1200	15
	10	2115	98	66	32	1300	30
	20	3955	99	66	32	1300	60
	30	5335	100	67	33	1300	100
	50	6700	103	68	34	1300	155
EVL-III	50	17×10^3	774	428	346	1800	125
	100	30×10^3	782	432	350	1800	215
	150	44×10^3	796	439	357	1800	340
	200	54×10^3	809	446	364	1800	450
	300	66×10^3	837	459	377	1800	650
EVL-IV	500	259×10^3	9930	5290	4640	4150	650
	1000	387×10^3	10.140	5395	4745	4150	1275
	1300	429×10^3	10.280	5465	4815	4150	1650
	1500	449×10^3	10.380	5515	4865	4150	1700
EVL-V	2000	$1{,}43 \times 10^6$	63×10^3	32.560	30.345	4800	1950
	3000	$1{,}82 \times 10^6$	64×10^3	32.860	30.645	4800	2930
	4000	$2{,}09 \times 10^6$	64×10^3	33.220	31.005	4800	3880
	5000	$2{,}27 \times 10^6$	65×10^3	33.610	31.395	4800	4000
EVL-VI	10.000	$8{,}20 \times 10^6$	434×10^3	221.570	213.150	11.800	8895
	15.000	$10{,}44 \times 10^6$	442×10^3	225.430	217.000	11.800	9830
	20.000	$11{,}80 \times 10^6$	450×10^3	229.650	221.230	11.800	9830

* The values for axial and radial load apply to the non-fixed case

Ordering code system

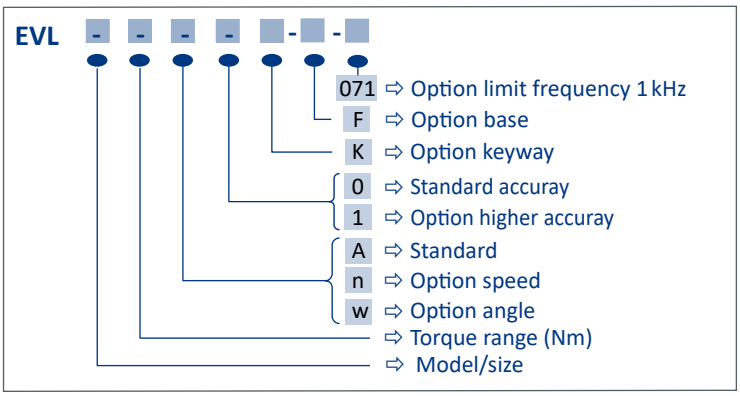

Available Accessories

Supply and display unit: VM_{base}

Cables

Couplings

Mechanical Dimensions EVL Option with base

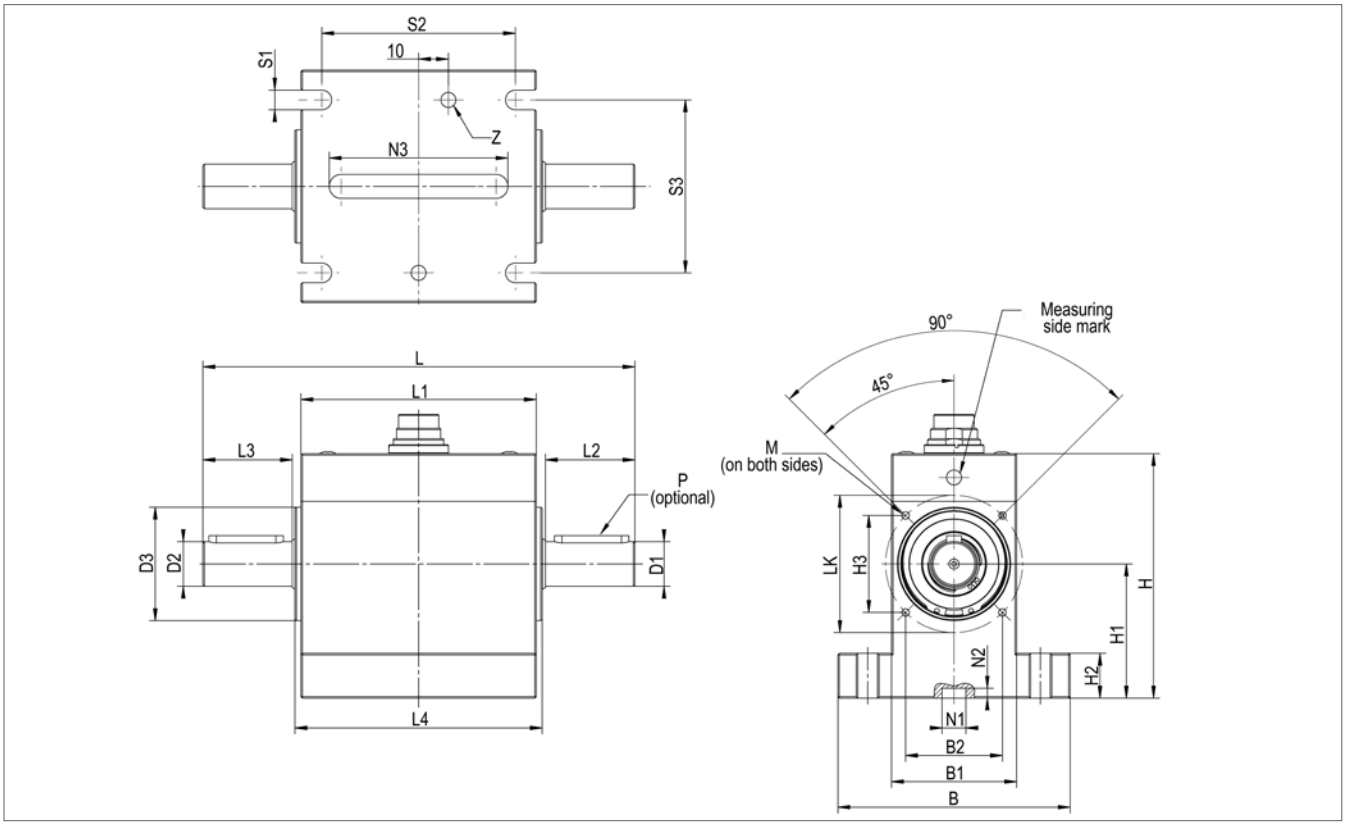

Model	EVL	EVL-I		EVL-Ib	EVL-II	EVL-III	EVL-IV	EVL-V	EVL-VI
Torque Ranges (± 0 - ... Nm)	0,02 0,05 0,10	0,05 0,1 0,2 0,5 1	2	1 2 5 10	5 10 20 30 50	50 100 150 200 300	500 1000 1300 1500	2000 3000 4000 5000	10.000 15.000 20.000
Dimensions:	(other ranges upon request; General tolerances DIN 2768-m)								
L (mm)	82	89	95	110	145	170	270	320	355
B (mm)	56	60		78	78	98	158	208	298
B1 (mm)	32	28		36	42	56	88	105	168
B2 (mm)	24	(→ LK)		(→ LK)	(→ LK)	(→ LK)	(→ LK)	--	--
H (mm)	78	85		85	82	90	172	228,5	316
H1 (mm)	45	45		45	45	45	112	160	215
H2 (mm)	12	12		15	15	15	20	30	40
Ø D1 g6 (mm)	3	8	8	10	15	26	45	70	110
Ø D2 g6 (mm)	3	5	6	10	15	26	45	70	110
Ø D3-0,1 (mm)	15	27		32	38	54	80	--	--
Ø LK ± 0,1 (mm)	(→ B2/H3)	32		38	45	65	98	--	--
L1	63	62		68	79	72	84	95	121
L2	7,5	11	14	18	30	45	85	110	115
L3	7,5	10	14	18	30	45	85	110	115
L4	67	66		72	83	78	90	--	--
N1H8 (mm)	6	6		8	8	10	10	10	10
N2 (mm)	2,8	2,8		3,3	3,3	3,3	3,3	3,3	3,3
N3 (mm)	50	50		60	60	60	60	80	100
S1	5,5	5,5		6,6	6,6	9	11	13	17
S2	50	50		50	65	55	65	70	90
S3	44	44		58	58	76	124	156	233
Ø Z E8	4	4		5	5	6	8	10	12
M	M2,5 x 5	M3 x 6		M3 x 6	M3 x 6	M4 x 8	M6 x 12	--	--
P (DIN 6885) optional	--	--		2x A3x3x14	2x A5x5x25	2x A8x7x40	4x A14x9x80	4x A20x12x100	--
Weight (g)	400	400		600	900	1600	6600	15.000	43.000
n max (min^{-1})	20.000	37.000		26.000	19.000	13.500	7900	6300	4000

Option mounting adapter

Construction X

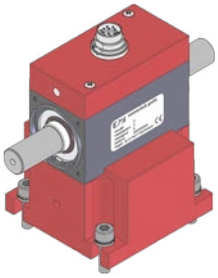

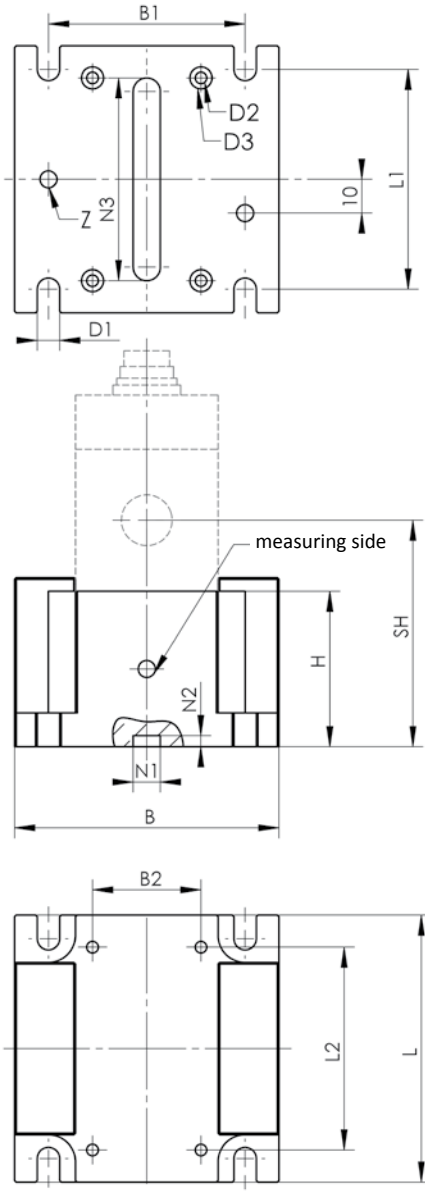

Construction Y

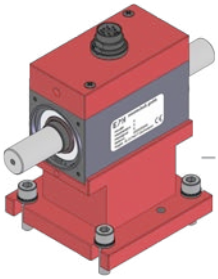

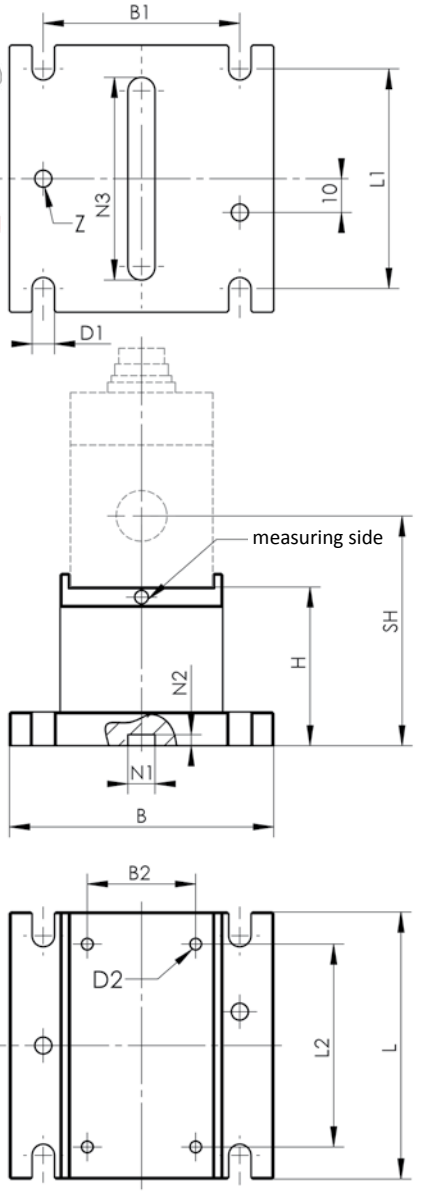

Type	EVL		EVL-I		EVL-Ib		EVL-II		EVL-III		EVL-IV		EVL-V		EVL-VI	
Construction	x	y	x	y	x	y	x	y	x	y	x	y	x	y	x	y
SH	23...55	≥56	25...60	≥61	29...65	≥66	32...67	≥68	41...84	≥85	67...119	≥120	93...154	≥155	152...211	≥212
Dimensions in mm																
L	63		62		68		79		72		84		95		121	
B	56		60		78		78		98		158		208		298	
H	= SH - 14		= SH - 14		= SH - 18		= SH - 21		= SH - 28		= SH - 44		= SH – 52,5		= SH - 84	
L1	50		50		50		65		55		65		70		90	
B1	44		44		58		58		76		124		156		233	
D1	5,5		5,5		6,6		6,6		9		11		13		17	
L2	50		40		56		60		42		46		75		91	
B2	24		22		24		32		40		70		85		138	
Ø D2	2,9		3,4		3,4		3,4		4,5		6,6		9		11	
Ø D3	6,5	--	6,5	--	6,5	--	6,5	--	8,5	--	11,5	--	15,5	--	18,5	--
N1 [H8]	6		6		8		8		10		10		10		10	
N2	2,8		2,8		3,3		3,3		3,3		3,3		3,3		3,3	
N3	50		50		60		60		60		60		80		100	
Ø Z E8	4		4		5		5		6		8		10		12	
Weight approx. (g)	80...330	≥230	110...380	≥220	150...430	≥350	180...660	≥420	230...850	≥500	740...2200	≥1300	1900...4100	≥2800	5700...9900	≥6800

Ordering Code: M-[Sensor-type]-SH[peak height] → Example: M-EVL-II-SH65