L-LAU
PIN LOAD CELLS

Manufactured according to OIML R60 standards

Capacity from 5000 kg to 20000 kg

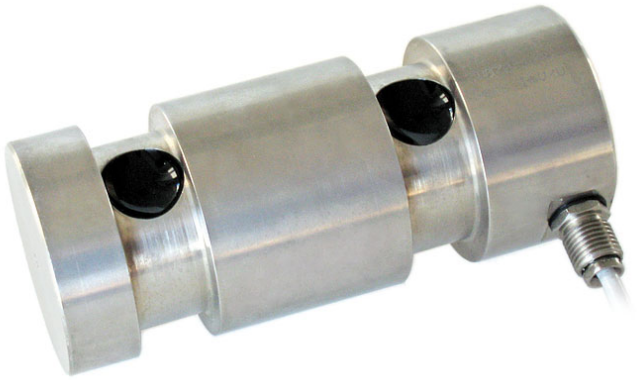

- 17-4 PH STAINLESS STEEL
- COMBINED ERROR ≤ ±0.1%
- PROTECTION CLASS IP67

CAPACITY kg				NET WEIGHT (kg)	CODE
5000	•	•	•	2.9	L-LAU5000
10000	•	•	•	3.2	L-LAU10000
20000	•	•	•	3.4	L-LAU20000

ON REQUEST

CERTIFICATIONS

Complies with the Eurasian Customs Union standards

CERTIFICATIONS ON REQUEST

- Accredia traceable calibration report
- ATEX II 1GD *(zone 0-1-2-20-21-22)*
- IECEx *(zone 0-1-2-20-21-22)*
- Complies with the Eurasian Customs Union standards for use in potentially explosive atmospheres

OPTIONS ON REQUEST

	DESCRIPTION
	Two redundant strain gauges Wheatstone bridges (350 Ω) with two output cables; for dual safety systems

DIMENSIONS (mm)

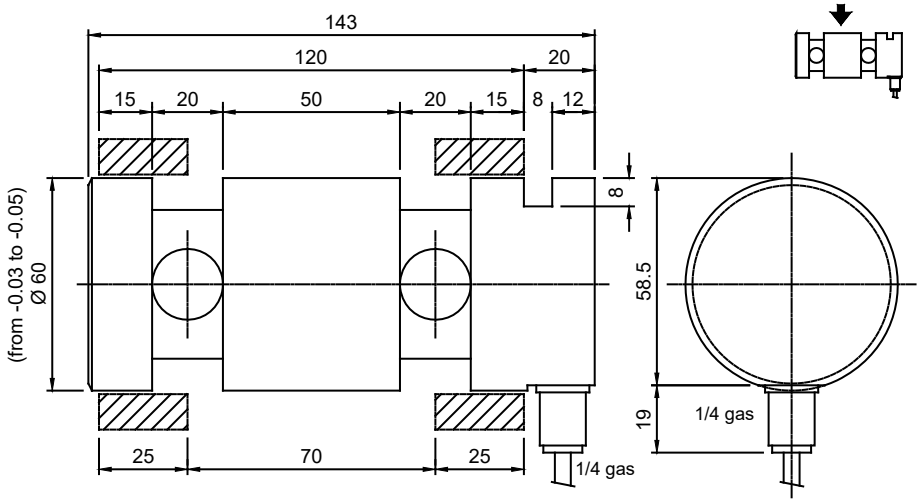

TECHNICAL FEATURES

Material	17-4 PH stainless steel
Nominal load (E max)	5000 - 10000 - 20000 kg
Combined error	≤ ±0.1%
Protection class	IP67

Rated output	1 mV/V ±0.1%	Input resistance	350 Ω ±20
Temperature effect on zero	0.005% °C	Output resistance	350 Ω ±5
Temperature effect on span	0.005% °C	Zero balance	±1%
Compensated temperature range	-10 °C / +50 °C	Insulation resistance	>5000 MΩ
Operating temperature range	-20 °C / +70 °C	Safe overload (% of full scale)	150%
Creep at nominal load in 30 minutes	0.03%	Ultimate overload (% of full scale)	400%
Max supply voltage without damage	15 V	Deflection at nominal load	0.4 mm

ELECTRICAL CONNECTIONS

Cable lenght	10 m
Cable diameter	5 mm
Cores	6 x 0.14 mm²

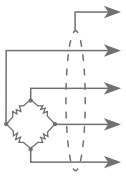

SHIELD	
+ SIGNAL	GREEN
+ EXCITATION + REF./SENSE	RED BLUE
- SIGNAL	WHITE
- EXCITATION - REF./SENSE	BLACK BROWN

The Company reserves the right to make changes to the technical data, drawings and images without notice.