OMS Race



Description

The OMS Race is a robust and lightweight non-contact optical sensor integrated with inertial measurement technology. Building on the technology known from the OMS 7, it has been miniaturized to an unprecedented form, with a focus on weight savings.

The sensor incorporates the proven spatial filter principle, enhanced with an Inertial Measurement Unit (IMU) and a novel signal processing approach. The combination results in improved accuracy and lower noise levels compared to similar products in the market.

The OMS Race sensor is particularly well-suited for motorsport applications, including elite racing series.

Features

- Proven spatial filter principle
- Highest dynamics due to 1kHz update rate
- Parameterizable sensor fusion
- CAN / CAN FD output
- Diagnostic data via CAN
- Sensor / ECU exchangeable
- Long-life IR-LED lighting
- Easy handling
- Precise optics / optomechanics

Applications

- Innovative motorsport series
- Motor racing
- Longitudinal and lateral dynamics
- Tire and brake performance
- Indoor testing
- Land Survey
- ADAS testing
- Mobile machines
- Motorcycle
- Parking tests
- Industrial Applications

Sensoric Solutions Optic and Motion GmbH
Gießener Straße 13
35582 Wetzlar-Dutenhofen

Sensoric Solutions

Technical data

	OMS Race180	OMS Race240	OMS Race260	
Speed				
Measuring range	250 / 400			km/h
Nonlinearity	< ±0.2			%FS
Angle				
Measuring range	±30			°
Measuring accuracy ±10°	< 0.1			°
Measuring accuracy ±30°	< 0.2			°
Optical resolution	≈ 0.5			mm
Working distance	180 ±60	240 ±60	260 ±50	mm
Angular Rates				
Measurement range	±500			°/s
Accelerations				
Measurement range	±20			g
Measurement frequency	1000			Hz
Signal delay	3.75			ms
Sensor fusion	Balanced / Optical prio / No fusion (Change by parameter)			
Supply	Galv. isolated			
Voltage	10 … 36			V
Power consumption (at 12 V)	< 15			W
Environmental conditions				
Storage / Operation	-40 … 85 / -25 … 50			°C
Shock / Vibration (Sensor)	Tested with profiles from F1 Teams			
Dimensions				
Sensor	75x44x28	83x44x28		mm
ECU	121 x 84 x 22			mm
Weight				
Sensor	140	155		g
ECU	270			g
Protection class				
Sensor (cable plugged)	IP67			
ECU (cable plugged)	IP67			
Illumination	IR			
Wavelength	850			nm
CAN Interface	FD / 2.0B (galv. isolated)			
Number of individual nodes	1			
Baudrate	125 / 250 / 500 / 1000 FD Data: up to 8			kBaud Mbit
Terminating resistor	Switchable or Fixed (user definable)			
Ethernet Interface	Galvanically insulated			
Parameterization	Webinterface			
Measurement data	TCPIP (protocol on request)			
I/O Interface	Digital In / Digital Out (TTL; galv. isolated)			

Sensoric Solutions Optic and Motion GmbH
Gießener Straße 13
35582 Wetzlar-Dutenhofen

Ordering Code

OMS Race□□□-□□□.□.□

Working distance [mm]	180* 240 260
Speed range [km/h]	250 400*
Orientation sensor	L: longitudinal*
CAN Resistor	S: Switchable* P: Permanently R: Removed

*) Standard: OMS Race180-400.L.S

Scope of delivery

Sensor	
Sensor cable 2m	MT0000372
Power cable	MT0000374
CAN Cable	MT0000376
ETH Cable	MT0000377

Transport Case	
USB Stick	MT0000212
Set of screws	
Screwdriver	MT0000214

Customized cable on request

Optional accessories OMS Race

Side Mount S2	MT0000381
Side Mount M2	MT0000382

Towing Lug Mount T2	MT0000380

Additional Information:

State of origin: Germany, Tariff Code: 90318020

Sensoric Solutions Optic and Motion GmbH
Gießener Straße 13
35582 Wetzlar-Dutenhofen

Drawings

Sensor OMS Race 80

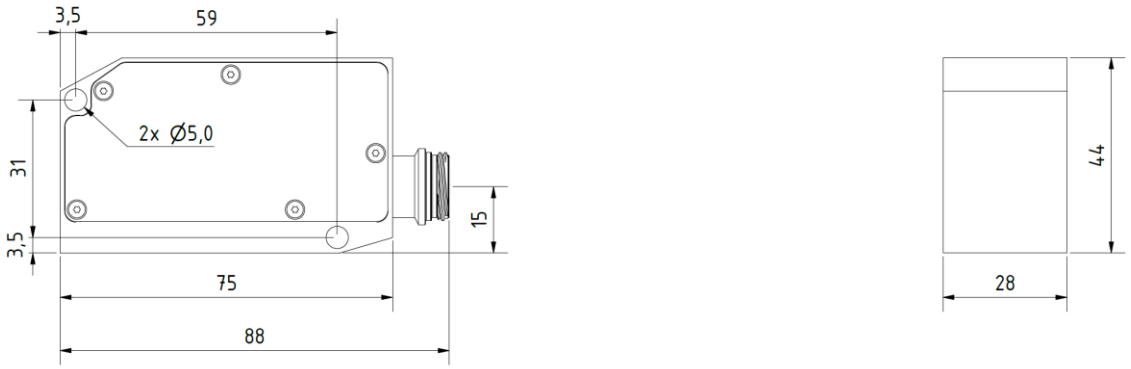

Sensor OMS Race240/260

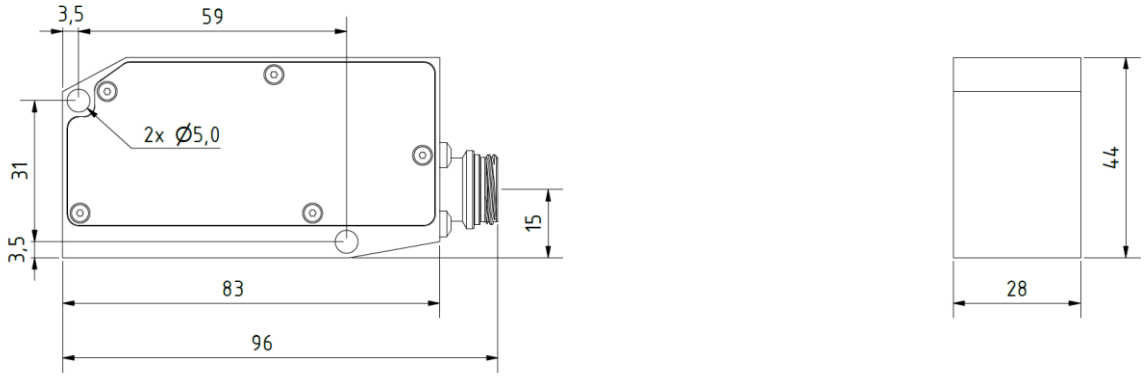

Sensoric Solutions Optic and Motion GmbH
Gießener Straße 13
35582 Wetzlar-Dutenhofen

ECU

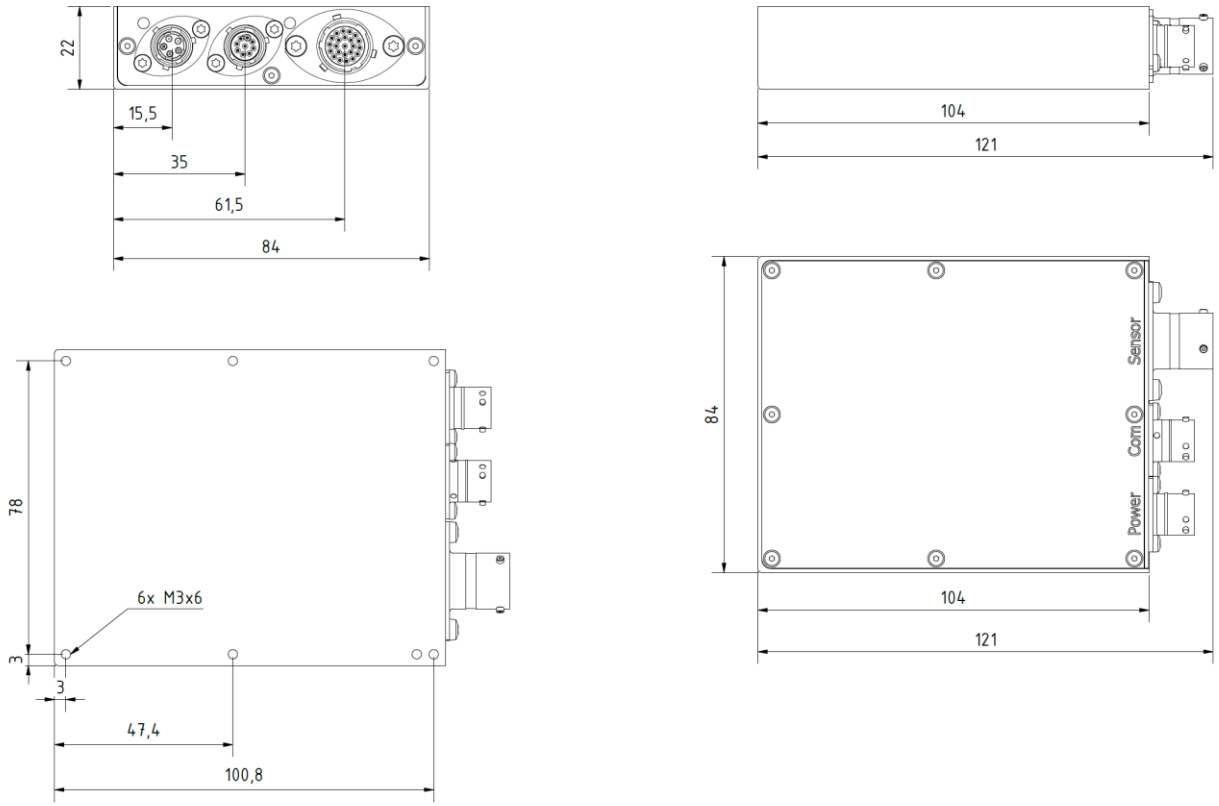

Sensoric Solutions Optic and Motion GmbH
Gießener Straße 13
35582 Wetzlar-Dutenhofen