Radar sensor for continuous level measurement of liquids and bulk solids



Application area

VEGAPULS 6X is a radar sensor for continuous level measurement of liquids and bulk solids.

The small process fittings offer particular advantages for liquids in small tanks or tight mounting spaces. The very good signal focusing ensures the use in vessels with many installations such as stirrers and heating spirals.

For bulk solids under most different process conditions, the device is ideal for level measurement in very high silos, large bunkers and segmented vessels. The VEGAPULS 6X is equipped with an encapsulated plastic antenna or a lens antenna integrated into the metal flange for this.

Applications

The VEGAPULS 6X can be used in almost all industrial areas and applications. It is selected anad adapted simply by an application-orientated configuration and setup.

Your benefit

- Maintenance-free operation thanks to non-contact measuring principle
- High plant availability, because wear and maintenance free
- Exact measuring results independent of process conditions

Function

The device sends a continuous radar signal or extremely short microwave pulses, depending on its measuring frequency, via its antenna. The transmitted signal ils reflected by the medium and received as an echo by the antenna.

The frequency difference between the transmitted and the received signal or the time from ransmitting to receiving the signals is proportional to the distance and depends on the filling height.

The thus determined filling height is transformed into an appropriate output signal and output as a measured value.

Technical data

Measuring range up to	120 m (393.7 ft)
Deviation	≤ 1 mm
Beam angle depending on antenna	3°
Measuring frequency	W-band (80 GHz technology), C-band (6 GHz technology), K-band (26 GHz technology)
Process fitting	Mounting straps, compression flanges from DN 80, 3", thread from G¾, ¾ NPT, plastic plated flanges from DN 50, 2", flange with swivelling holder from DN 100, 4"
Process pressure	-1 … 25 bar (-100 … 2500 kPa/-14.5 … 362.6 psig)
Process temperature	-196 … +250 °C (-321 … +482 °F)
Ambient, storage and transport temperature	-40 … +80 °C (-40 … +176 °F)
Bluetooth standard	Bluetooth 5.0
Effective range typ. depending on the local conditions	25 m (82 ft)
Operating voltage	12 … 35 V DC
Output signal	4 … 20 mA/HART, Profibus PA, Foundation Fieldbus, Modbus
Protection rating	IP66/IP67, IP66/IP68 (0.2 bar), IP68 (1 bar), IP69K according to IEC 60529, type 6X according to NEMA

Materials

The wetted parts of the instrument are made of 316L, PP, PTFE or PEEK. The process seal is made of FKM, FFKM, EPDM or PTFE.

You will find a complete overview of the available materials and seals in the " *Configurator*" at www.vega.com and " *VEGA Tools*".

Housing versions

The housings are available as single chamber or double chamber version in plastic, stainless steel or aluminium.

They are available with protection ratings up to IP68 (1 bar).

Electronics versions

The device is available in different electronic versions.

In addition to 4 … 20 mA/HART in two and four-wire versions, digital versions with Profibus PA, Foundation Fieldbus and Modbus protocol are also possible.

In addition, the VEGAPULS 6X can also be conifugred with integrated overvoltage arrester, additional current output as well as integrated radio module PLISCMOBILE 81.

Approvals

Worldwide approvals are available for VEGA instruments, e.g. for use in hazardous areas, on ships or in hygienic applications.

The technical data in the respective safety instructions are valid for approved instruments (e.g. with Ex approval). In some cases, these data can differ from the data listed herein.

You can find detailed information on the existing approvals with the appropriate product on our homepage.

Adjustment

Adjustment directly at the measuring point
The adjustment of the instrument is carried out via the optional display and adjustment module PLICSCOM or via a PC with the adjustment software PACTware and corresponding DTM.

Wireless adjustment via Bluetooth
The Bluetooth version of display and adjustment module enables a wireless connection to standard adjustment units. This can be smartphones/tablets with iOS or Android operating system or PCs with PACTware and Bluetooth USB adapter.



Wireless connection to standard operating devices

Adjustment is hence carried out via a free-of-charge app from the Apple App Store or the Google Play Store or the adjustment software PACTware and respective DTM.

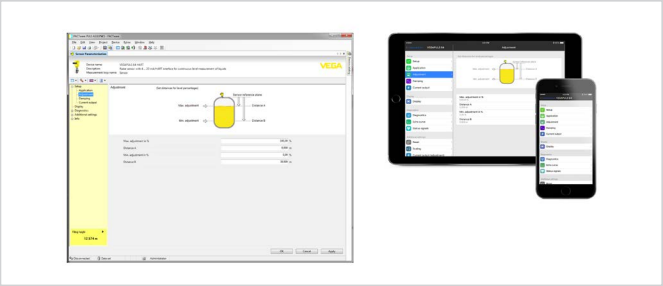

Adjustment via PACTware or app

Adjustment via remote systems
Further adjustment options are possible via a HART Communicator as well as manufacturer-specific programs such as AMS™ or PDM.

Electrical connection

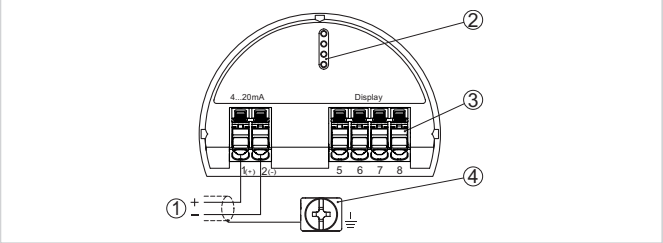

Electronics and connection compartment, single chamber housing (example)

1 *Voltage supply/Signal output*
2 *For display and adjustment module or interface adapter*
3 *For external display and adjustment unit*
4 *Ground terminal for connection of the cable screening*

Dimensions

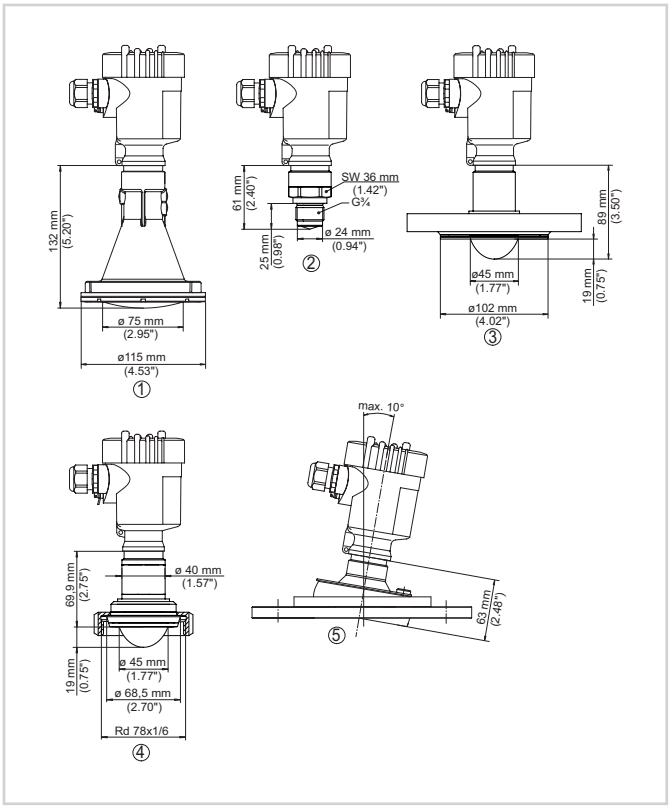

Dimensions und antenna versions VEGAPULS 6X

1 *Plastic horn antenna*
2 *Thread with integrated antenna system*
3 *Flange with plastic plating*
4 *Hygienic fitting*
5 *Flange with lens antenna*

Information

You can find further information on the VEGA product line on our homepage.

In the download section on our homepage you'll find operating instructions, product information, brochures, approval documents, instrument drawings and much, much more.

Depending on the device, the current device software and the appropriate operating software are also available there.

Instrument selection

On our homepage under " *Products*" you can select the suitable measuring principle and instrument for your application.

There you will also find detailed information on the available device versions.

Contact

You can find your personal contact person at VEGA on our homepage under " *Contact*".