VEGASON 63

4 … 20 mA/HART - two-wire

Ultrasonic sensor for continuous level measurement



Application area

The VEGASON 63 is an ultrasonic sensor for continuous level measurement of liquids or bulk solids. Typical applications are the measurement of liquids in storage vessels or open basins. The sensor is also suitable for continuous level measurement of bulk solids in small vessels up to average-size vessels. The non-contact measuring principle is independent of product properties and enables a setup without medium.

Your benefit

- Maintenance-free operation thanks to non-contact measuring principle
- Reliable measurement, independent of product properties
- Proven measurement technique for standard applications

Function

Short ultrasonic pulses in the range of 18 kHz to 70 kHz are emitted by the transducer in the direction of the product, reflected by the product surface and received back by the transducer. The pulses travel at the speed of sound - the elapsed time from emission to reception of the signals is proportional to the level in the vessel.

Technical data

Measuring range	
– In liquids up to	15 m (49.21 ft)
– In bulk solids up to	7 m (22.97 ft)
Deviation	±6 mm or < 0.2 %
Process fitting	Compression flange DN 100, mounting strap
Process pressure	-0.2 … +1 bar/-20 … +100 kPa (-2.9 … +14.5 psig)
Process temperature	-40 … +80 °C (-40 … +176 °F)
Ambient, storage and transport temperature	-40 … +80 °C (-40 … +176 °F)
Operating voltage	14 … 36 V DC
SIL qualification	Optionally up to SIL2

Materials

The wetted parts of the instrument are made of UP or 316Ti. The process seal is made of EPDM.

You will find a complete overview of the available materials and seals in the "*Configurator*" at www.vega.com and "*VEGA Tools*".

Housing versions

The housings are available as single chamber or double chamber version in plastic, stainless steel or aluminium.

They are available with protection ratings up to IP 68 (1 bar).

Electronics versions

The instruments are available in different electronics versions. Apart from the two-wire electronics with 4 … 20 mA/HART, a four-wire version and two purely digital versions with Profibus PA and Foundation Fieldbus are available.

Approvals

The instruments are suitable for use in hazardous areas and are approved e.g. according to ATEX and IEC. The instruments also have various ship approvals such as e.g. GL, LRS or ABS.

Adjustment

Adjustment on the measurement loop

The adjustment of the instrument is carried out via the optional display and adjustment module PLICSCOM or via a PC with the adjustment software PACTware and corresponding DTM.

Wireless adjustment via Bluetooth

The Bluetooth version of display and adjustment module enables a wireless connection to standard adjustment units. This can be smartphones/tablets with iOS or Android operating system or PCs with PACTware and Bluetooth USB adapter.



Wireless connection to standard operating devices

Adjustment is hence carried out via a free-of-charge app from the Apple App Store or the Google Play Store or via the adjustment software PACTware and respective DTM.

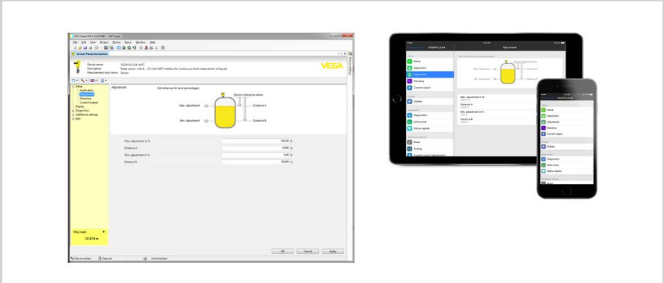

Adjustment via PACTware or app

Adjustment via remote systems

Further adjustment options are possible via a HART Communicator as well as manufacturer-specific programs such as AMS™ or PDM.

Electrical connection

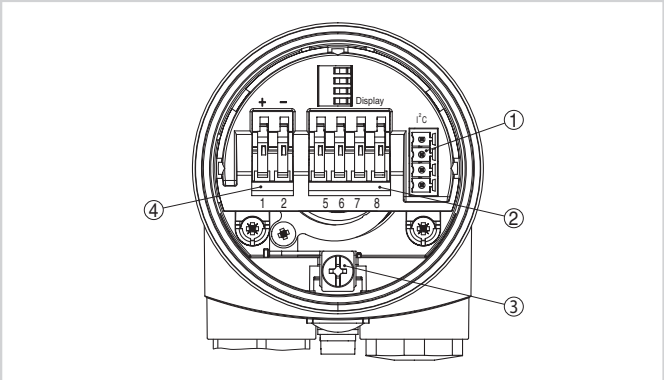

Electronics and connection compartment, single chamber housing

1 *Plug connector for VEGACONNECT (I^2C interface)*
2 *Spring-loaded terminals for connection of the external indication VEGADIS 61*
3 *Ground terminal for connection of the cable screening*
4 *Spring-loaded terminals for voltage supply and signal output*

Dimensions

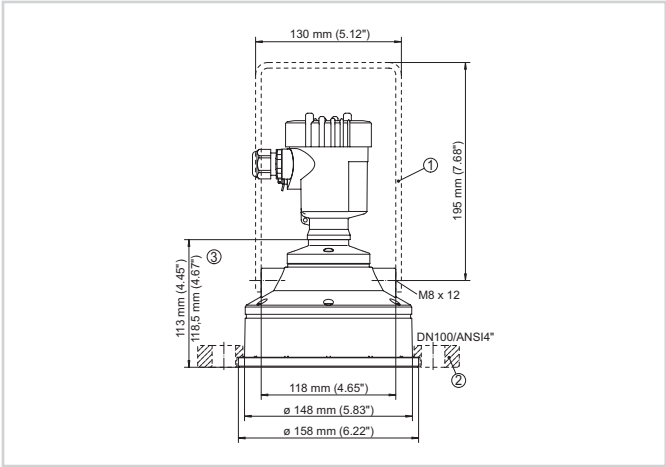

Dimensions VEGASON 63

1 *Mounting strap*
2 *Compression flange*
3 *Dimension for aluminium housing/adapter*

Information

You can find further information about the VEGA product line on www.vega.com.

In the download section at www.vega.com/downloads you'll find operating instructions, product information, brochures, approval documents, instrument drawings and much, much more.

There, you will also find GSD and EDD files for Profibus PA systems as well as DD and CFF files for Foundation Fieldbus systems.

Instrument selection

Under "*Specify product*" on www.vega.com and "*Products*" you can select the suitable measuring principle and instrument for your application.

You can find detailed information on the instrument versions in the "*Configurator*" at www.vega.com and "*Products*".