L-BILPSTA

PRICE COMPUTING RETAIL SCALE WITH INTEGRATED PRINTER

CE-M certificate: 2014/31/EU, EN 45501, OIML R76 class III, legal for trade use with CE marking and conformity assessment (initial verification).

DESCRIPTION

- Integrated thermal printer with real-time clock/calendar.
- Stainless steel plate.
- Backlit LCD displays on both sides, 4x 6-digit (15 mm height) and 1x 18-digit (10 mm height).
- 50-key waterproof keyboard.
- Bubble level and adjustable feet.
- 6 V rechargeable internal battery, 10 Ah capacity.
- Operating time: 100 hours.
- Power supply included.
- Auto power-off.



MAIN FUNCTIONS

- Simultaneous management of 3 operators.
- Simultaneous display of: weight, unit price, amount, tare, date and time or customized message.
- Display of amount per item and total amount.
- Price unit setting: €/kg - €/100 g.
- Preset tare.
- Automatic cancellation of price and tare.
- 100 storable items (PLU) with the following parameters: name, code, price unit, unit sales price, unit purchase price, preset tare, stock.
- 56 PLU directly retrievable via keyboard.
- Items selling by number of pieces.
- Automatic change calculation.
- Management of purchase prices and suppliers.
- Automatic or manual loading of stocks.
- Printing of amount per item, total amount and change.
- Printing of sales and purchase archives, stocks, under-stock items.
- Non-fiscal receipt printing: customizable header, date, time, operator number, item name, net weight, unit price, amount per item, total amount, change and customized message.

CAPACITY kg	DIVISION (g)	NET WEIGHT (kg)	CODE
3/6	e=1/2	8.6	L-BILPSTA6
6/15	e=2/5	8.6	L-BILPSTA15
15/30	e=5/10	8.6	L-BILPSTA30

DIMENSIONS (mm)

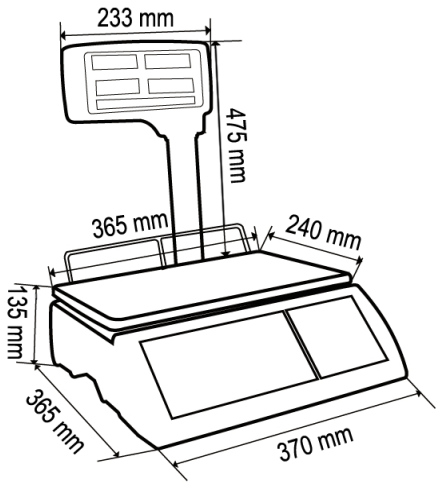

TECHNICAL FEATURES

Power supply	230 VAC ±10%
Internal battery	6 V, 10 Ah capacity
Linearity	<0.01% full scale
Display resolution	3000
Units of measure	kg
Serial port	RS232
Baud rate	600, 1200, 2400, 4800, 9600 (bit/s)
Humidity (condensate free)	<85%
Storage temperature	-10 °C +50 °C
Working temperature	-10 °C +40 °C

METROLOGICAL SPECIFICATIONS OF TYPE-APPROVED INSTRUMENTS

Applied standards	2014/30/UE - EN 55022:2010 - EN 55024:2010 - EN61000-3-2:2014 - EN61000-3-3:2013
Operation modes	multi-interval
Accuracy class	III
Maximum number of scale verification divisions	3000 (class III)

OPTIONS ON REQUEST

	DESCRIPTION	CODE
	Stainless steel deep tray. Dimensions: 240x340x40 mm.	L-PIATTOBACSTA
	Panasonic rechargeable battery mod. LC-R0612P - 6 V, 12 Ah capacity.	L-BATTERIA6V12AH
	Thermal paper roll for weight/price/amount scales.	L-CARTAFISC
	Thermal paper roll.	L-CARTASTAVT
	Adhesive thermal paper roll.	L-CARTAFISCADEN

The Company reserves the right to make changes to the technical data, drawings and images without notice.