

PKP-1100-LI

PKP-1100-LI is a versatile digital key button featuring interchangeable 24 mm inserts. It supports a CAN-bus 2.0B interface, while also offering the flexibility to function as a hardwired unit. Designed for durability, the **PKP-1100-LI** is water-and dust-resistant, making it suitable for both indoor and outdoor cockpit installations. The integrated RGB LED lighting and easily swappable icons allow for extensive customization, enabling users to adapt the button to a wide variety of functions and styles

SOFTWARE FEATURES

CAN Keypad Addresses – Assign any valid CAN address to the button.

CANopen Communication Protocols – Fully compliant with Device Profile 401d.

J1939 Address Claim Transmission – The button no longer has to be pre-programmed to a specific address. This enables customers that work in applications in the field without access to a GUI to use any replacement device on-hand. The button can be configured to automatically announce itself and accept a new address assignment as appropriate.

Event Status Transmission – The button can send messages to the bus indicating a press/release event has occurred. This confirmation allows digital systems to have the same input acknowledgements as that of the latching position of a mechanical switch.

Periodic Status Transmission – The button sends a continuous broadcast of messages indicating the press or release status. The frequency of these messages can be adjusted in a wide range.

Periodic Heartbeat – The button sends a continuous broadcast of messages indicating it is functioning correctly. The frequency of these messages can be adjusted in a wide range.

Online Set-up – An online set-up system makes it possible to select and design your own prototype, then order it directly on blinkmarine.com.

HARDWARE FEATURES

Hardwired Features – In addition to its CAN-bus functionality, the device can operate as a normally open hardwired pushbutton. The backlight LEDs can also be controlled via hardwired connections.

Power-On Trigger – The normally open pushbutton in hardwired mode allows the device to be used even when the battery is disconnected, as it does not require power to operate. This makes it an ideal solution as a trigger for activating the electrical system.

IP67/IP69K Waterproof Rating – Guaranteed to be dust tight and sealed against water immersion to a depth of 1 meter for up to 1 hour. The IP69K rating provides protection against high pressure water at high temperature spray downs.

UV Protected – UVB 400 hours: button is highly resistant to deterioration caused by exposure to sunlight.

Customizable Inserts – The replacement system for individual inserts makes modifying the button layout simpler and more economical. Thousands of different stock inserts can be viewed at blinkmarine.com, and it is possible to order customized ones.

A membrane compensation valve which self compensate the internal pressure within the button, alleviating mechanical stresses that can be produced by shifts in external temperatures.

The rubber is molded on the backside in such a way that it acts as a gasket, blocking liquids and preventing them from leaking in through the attachment holes located on the support upon which the button is installed.



Icons shown on this keypad are for visual demonstration only.

STANDARD FEATURES

- Replaceable icon inserts
- Configurable LED
- High intensity LED status indicators
- LED backlit icons
- Multicolor indicator ring
- Laser etched icons
- Programmable functions (momentary, toggle, scroll...)
- Thousands of stock icons to choose from
- Flush or front mount
- Protected from inverted polarity
- Normal open hardwired button
- 2 colors LED command signals

SOFTWARE FEATURES

- Change CAN addresses independently
- Periodic Status transmission
- Heartbeat
- Event status transmission
- LED acknowledgement
- Address claim transmission
- CANopen and J1939 communication protocol
- Plug-and-play reconfigurability
- Detailed user manuals available

OTHER BENEFITS

- Specific connectors and cables are available on request

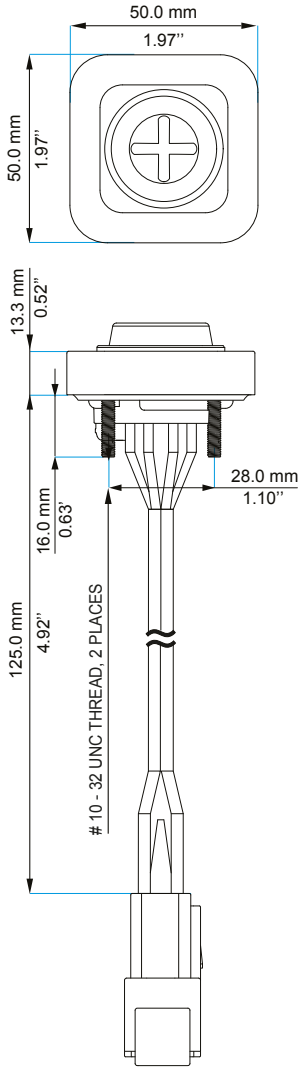

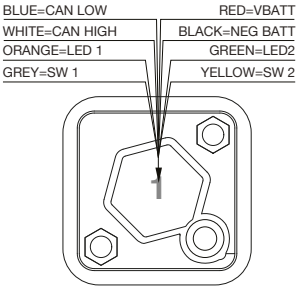

MOUNTING NOTES:
Nuts thread: 2x #10-32
Maximum torque: 1,8Nm - 16lbf-in

All connection wires are the same length

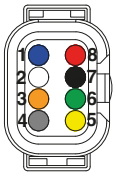

WIRE SIDE

CONNECTOR STANDARD PINOUT

PIN	COLOUR	FUNCTION
1	Blue	CAN L
2	White	CAN H
3	Orange	LED 1
4	Grey	SW 1
5	Yellow	SW 2
6	Green	LED 2
7	Black	Negative battery
8	Red	Vbatt. (12-24V)

The one illustrated above is the standard pinout; however, some keypads may be supplied with alternative pinouts or connectors.

SPECIFICATIONS FOR STANDARD KEYPADS

ELECTRICAL	PKP-1100-LI
Supply Voltage	12-24Vdc Nominal (8-32VDC)
Standby Current	<50 mA
Communication BUS	CANopen, J1939
Hardwired button current	100mA Max
Hardwired button voltage	35V Max
MTBF	210899 hours (in accordance with MIL-HDBK-217 – operating environment ground mobile)

MECHANICAL	PKP-1100-LI
Standard Connector	Deutsch DTM04-8P
Switch Life	1 million operations
Mounting Studs	2x #10-32 Steel
Rubber Specs	Silicone rubber with polyurethane hardcoat
PCB	1,6mm thick, Nema Grade FR-4, double clad with 1oz copper
Operating Temperature	-40°C to +70°C
Storage Temperature	-40°C to +85°C
Thermal Shock	-40°C to +85°C According to table 2 of ISO16750-4
Mechanical Shock Test	IEC 60068 2-27 3-axis X,Y,Z 50Gs 11ms
Vibration Test	IEC 60068 2-6 3-axis X,Y,Z 10-150Hz 0.15mm
UV Protection	UVB 400 hours
Salt Spray	Per ASTMB117
Chemical Resistance	Engine Cleaner, Isopropyl Alcohol, Suntan Lotion, Multi-Purpose Cleaner, Muriatic Acid
Ingress protection Rating	IP67/IP69K
Weight	90 gr (Insert excluded)

Blink S.r.l.
Via Montefeltro, 6 - 20156 Milano - Italy
Tel. +39 02 3088583 - Fax +39 02 33406697
www.blinkmarine.com - info@blinkgroup.com

!WARNING! IMPROPER SELECTION, IMPROPER USE AND/OR FAILURE OF THE BLINK SYSTEMS PRODUCTS DESCRIBED HEREIN OR RELATED ITEMS CAN CAUSE DEATH, PERSONAL INJURY AND PROPERTY DAMAGE. This document and other information from Blink, provide product and/or system options for further investigation by users having technical expertise. It is important to analyze all aspects of the application, including consequences of any failure. Due to the variety of operating conditions and applications for these product(s), the manufacturer of the application is solely responsible for marking the final selection of the product(s) and assuring that all performance, safety and warning requirements of the application are met. The products described herein, including without limitation, product features, specifications, designs, availability and pricing, are subject to change by Blink at any time without notice.