

POWERTRACK

The PowerTrack keypad and its rotary encoder were both designed by Blink Marine as a natural evolution of the Powerkey 1000, from which it has inherited the same attractive and compact visual design.
Together with the six quick-pick keys, the addition of a rotary pushbutton knob makes it possible to manage complex scroll functions on the display, and can interface with onboard systems thanks to CANbus protocols. PowerTrack boasts numerous personalization options, thanks in part to the flexible management of multicolor LEDs.

SOFTWARE FEATURES

CAN Keypad Addresses – Assign any valid CAN address to the keypad.

CANopen Communications Protocol – Fully compliant with Device Profile 401d.

J1939 Address Claim Transmission – Keypads no longer have to be pre-programmed to a specific address. This enables customers that work in applications in the field without access to a GUI to use any replacement keypad on-hand. The keypad can be configured to automatically announce its address and accept a new address assignment as appropriate.

Event Status Transmission - The keypad can send messages to the BUS indicating a button press event or a button release event has occurred. This confirmation allows digital systems to have the same input acknowledgements as that of the latching positions of a mechanical switch.

Periodic Status Transmission - The keypad sends a continuous broadcast of messages, indicating the status of each button, as well as the positions of the joystick and the encoder at that instance. The frequency of these messages can be adjusted in a wide range.

Periodic Heartbeat – The keypad sends a continuous broadcast of messages indicating it is functioning correctly. The frequency of these messages can be adjusted in a wide range.

Smart LED Management – The intensity of the LEDs can be adjusted, whilst any LED indicator – whether fixed or blinking – can be personalized according to color preference. Backlighting for the keypad is also adjustable.

HARDWARE FEATURES

Splashproof – PowerTrack is resistant to impacts generated by water spray and other potentially damaging elements like dust, sand and mud.

UV Protected – UVB 400 hours: Keypad is highly resistant to deterioration caused by exposure to sunlight.

Concave Keys – The ergonomic design simplifies touch navigation of the quick-pick keys.

Independent Key – The device is able to support any multiple pressure key combination.

An Ergonomic Knob – This controller was designed to guarantee a comfortable grip in any given situation thanks to a rubber insert that wraps all the way around the knob.

Encoder With Pushbutton – Use of the knob is both comfortable and immediate. For example, the knob allows its user to manage scroll & select operations without letting go of the handle.






STANDARD FEATURES

- Configurable LED
- Multicolor LED backlight
- High intensity LED status indicators
- LED backlit icons
- Green/red LED indicators
- Programmable functions (momentary, toggle, scroll...)
- Vertical or horizontal mount
- Protected from inverted polarity

SOFTWARE FEATURES

- Change CAN keypad addresses independently
- Periodic Status transmission
- Heartbeat
- Event status transmission
- LED acknowledgement
- Address claim transmission
- CANopen and J1939 communication protocol
- Plug-and-play reconfigurability
- Detailed user manuals available

OTHER BENEFITS

- Custom laser etched icons
- Specific connectors and cables are available on request
- Pad printed logo

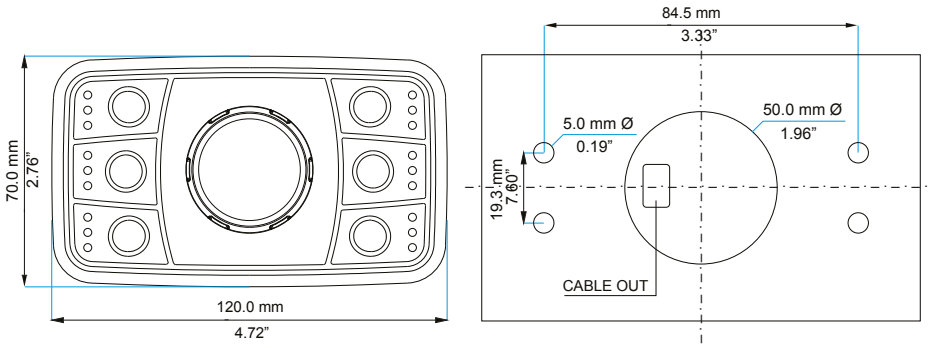

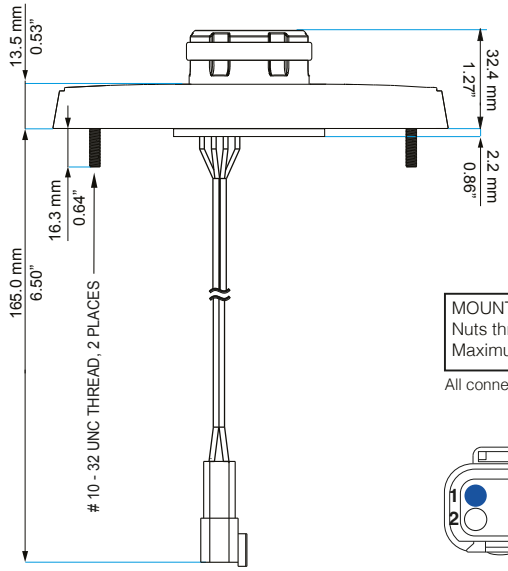

MOUNTING NOTES:
Nuts thread: 4x #10-32
Maximum torque: 1,8Nm - 16lbf-in

All connection wires are the same length

WIRE SIDE

CONNECTOR STANDARD PINOUT

PIN	COLOUR	FUNCTION
1	Blue	CAN L
2	White	CAN H
3	Back	Negative battery
4	Red	Vbatt. (12-24V)

The one illustrated above is the standard pinout; however, some keypads may be supplied with alternative pinouts or connectors.

SPECIFICATIONS FOR STANDARD KEYPADS

ELECTRICAL	POWERTRACK
Supply Voltage	12-24Vdc Nominal (8-32VDC)
Standby Current	<50 mA
Communication BUS	CANopen, J1939
MTBF	95049 hours (in accordance with MIL-HDBK-217-operating environment ground mobile)

MECHANICAL	POWERTRACK
Standard Connector	Deutsch DT04-4P
Switch Life	3 million operations
Mounting Studs	4x #10-32 Steel
Rubber Specs	Silicone rubber with polyurethane hardcoat
PCB	1,6mm thick, Nema Grade FR-4, double clad with 1oz copper
Operating Temperature	-40°C to +70°C
Storage Temperature	-40°C to +85°C
Thermal Shock	-40°C to +85°C According to table 2 of ISO16750-4
UV Protection	UVB 400 hours
Salt Spray	Per ASTMB117
Chemical Resistance	Engine Cleaner, Isopropyl Alcohol, Suntan Lotion, Multi-Purpose Cleaner, Muriatic Acid
Ingress protection Rating	IP54
Weight	180 gr

Blink S.r.l.
Via Montefeltro, 6 - 20156 Milano - Italy
Tel. +39 02 3088583 - Fax +39 02 33406697
www.blinkmarine.com - info@blinkgroup.com

!WARNING! IMPROPER SELECTION, IMPROPER USE AND/OR FAILURE OF THE BLINK SYSTEMS PRODUCTS DESCRIBED HEREIN OR RELATED ITEMS CAN CAUSE DEATH, PERSONAL INJURY AND PROPERTY DAMAGE. This document and other information from Blink, provide product and/or system options for further investigation by users having technical expertise. It is important to analyze all aspects of the application, including consequences of any failure. Due to the variety of operating conditions and applications for these product(s), the manufacturer of the application is solely responsible for marking the final selection of the product(s) and assuring that all performance, safety and warning requirements of the application are met. The products described herein, including without limitation, product features, specifications, designs, availability and pricing, are subject to change by Blink at any time without notice.