# S-STRW Flow controller

## Flow controller

**Calorimetric screw-in flow controller for use in air, fluids and granules**

### Characteristics




- **Registration range from 1 ... 150 cm/sec up to 2 ... 30 m/sec**
- **Output as PNP transistor (24 V DC/400 mA)**
- **Integrated electronics**
- **One-piece special steel sensor of VA?, Resistance to pressure for up to 100 bar**
- **Balancing display with 6 LEDs (red, yellow, green)**
- **IP 67 degree of protection**

### Description

The electric functioning of the flow sensor is based on the calorimetric principle. The temperature of the measurement sensor is raised from its inner with some degrees Celsius in relation to the temperature of the flowing medium into which the sensor is projecting. If the medium is flowing, the heat produced in the sensor is dissipated through the medium, i.e. the sensor is cooled down. The temperature that ensues in the sensor is measured and compared to the registered medium temperature. The state of flow of the medium can be derived from the registered temperature difference. .

By means of a novel type of electric and mechanic design, the probe is made of special steel and is designed in one single piece. This way, it has been possible to achieve complete impermeability and high resistance to pressure. In corrosive media, especially in oxidative media, special steel is conditionally stable. The sensor should be made of, at least, the same material as the one used for this medium.

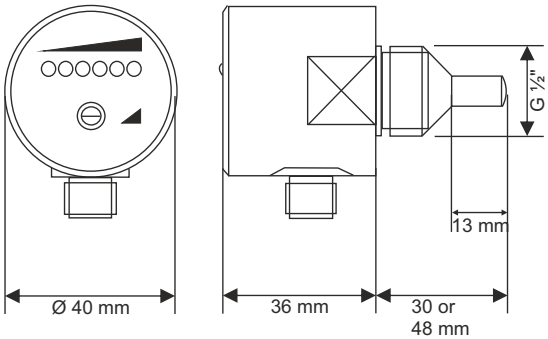

# S-STRW Strömungswächter

## Technical data

### Input

| | | | |
|---|---|---|---|
| Registration range (flow rate): | water | 1 ... 150 cm/sec | Nominal value 20 |
| | oil | 3 ... 300 cm/sec | Nominal value 60 |
| | air | 2 ... 30 cm/sec | Nominal value 4 |

### Output

| | |
|---|---|
| Flow output: | PNP contact, 400 mA (20 °C) |
| Adjustable switching delay: | none |
| Adjustable limit monitoring: | none |

### Display

| | | |
|---|---|---|
| Flow: | red: | Adjusted flow value not reached = "Flow" output open; |
| | yellow: | Adjusted flow value reached = "Flow" output connected; |
| | yellow and green: | Adjusted flow value passed over = "Flow" output connected, sufficient flow reserves |

### Power supply

| | |
|---|---|
| Operating voltage, tolerance: | 24 V DC, ± 20 % |
| Current consumption: | 70 mA |

### Ambient conditions

| | |
|---|---|
| Temperature of media: | -20 ... +80 °C |
| Ambient temperature: | -20 ... +80 °C |
| Temperature gradient: | 250 °C/min |
| Temperature jump interval: | typically 12 sec |
| Resistance to pressure: | 100 bar |

### Dimensions

| | |
|---|---|
| Case: | 66 x 40 mm or 74 x 40 mm |
| Process terminal: | G ½" |
| Material of case: | special steel A2 or A4 |
| Sensor material (DIN 17 440): | 1.4305 design V2A<br>1.4571 design V4A |
| Colour: | silver |
| Degree of protection: | DIN 40 050, IP 67 |
| Weight: | approx. 0,5 kg |
| Terminals: | universal metal connector Lumberg RSF 4 |

# S-STRW Strömungswächter

## Adjustment instructions

**Calibration at resting medium**

1. Mount the sensor in the flow channel and switch on the instrument.
2. Adjust the potentiometer so that the red LED lights up.
3. When connecting the flow, at least one green LED must be lit up.

**Calibration at flowing medium**

1. Mount the sensor in the flow channel, preset the flow and switch on the instrument.
2. Adjust the potentiometer so that 2 green LEDs are shining.
3. If the flow is cut, the red LED must now light up.

**Calibration when the adjusted flow is not reached**

This type of calibration is only possible if the flow rate is within the registration range of the chosen sensor.

1. Mount the sensor in the flow channel, preset the flow and switch on the instrument.
2. Adjust the potentiometer so that the first green LED just lights up.
3. If the flow rate decreases, to begin with the green LED ceases to shine, and if the flow rate drops further also the yellow one, the output opens, the red LED will light up.

**Calibration when the adjusted flow is exceeded**

This type of calibration is only possible if the flow rate of the medium is within the registration range of the chosen sensor.

1. Mount the sensor in the flow channel, preset the flow and switch on the instrument.
2. Adjust the poteniometer so that the red LED just lights up.
3. If the flow rate increases, the red LED will cease to shine, the yellow LED lights up and the output is connected.

The switching point of the flow rate is adjusted with the help of the switching amplifier. In case of flow rates passing the registration limit of the connected sensor, the cut-off or the reduction of the flow is indicated when the flow rate of the medium reaches the registration range of the sensor.

**LED indication for flow**

***Red:***
Either the flow has be cut off or the preset flow value has not been reached. The output "Flow" is open.

***Yellow:***
The set flow value is reached, the output flow is connected.

***Green:***
The set flow value is exceeded. The flow reserve is sufficient.

**LED indication for temperature**

***Red:***
The set temperature value is reached and the "Temperature" output is connected.

**LED indicaton for disconnection delay**

***Yellow and red:***
The set flow value is not reached. The "Flow" output stays connected until the set value for the switching delay is reached.

## Terminal connecting plan

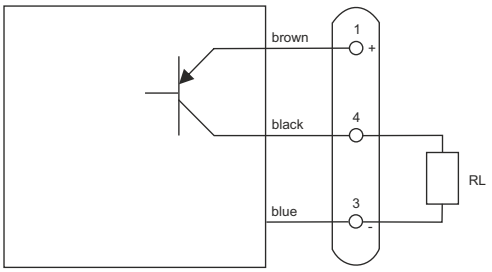

# S-STRW Strömungswächter

## Ordering Code

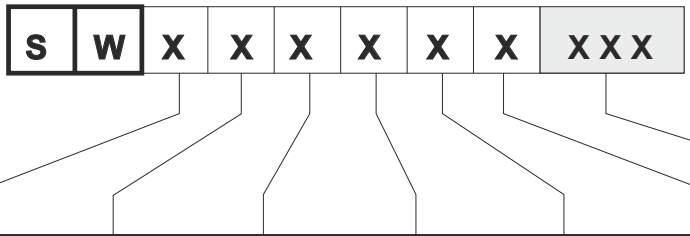


| No. | Mounting area | Output | Supply | Sensor Material | | | Medium |
|---|---|---|---|---|---|---|---|
| 0 | 30 mm | Transistor max.400 mA | 24 V DC | 1.4305 design V2A | | | please specify e.g. water |
| 1 | 48 mm | | | 1.4571 design V4A | | | |