MINITRAC 31

4 … 20 mA/HART - four-wire

Radiometric sensor for density measurement



Application area

The MINITRAC 31 is a radiometric sensor for non-contact density measurement of liquids and bulk solids. The MINITRAC 31 detects the density contactlessly from outside through the pipeline or vessel wall. Through its compact design it is ideal for mounting in positions hardly to access and in narrow space applications.

Your benefit

- Simple retrofitting during production processes
- High plant availability through non-contact measurement
- Exact measuring results independent of process conditions

Function

In radiometric measurement, a Caesium-137 or Cobalt-60 isotope emits focussed gamma rays. A special sensor on the opposite side of the vessel receives this radiation. The scintillator of the sensor converts these gamma rays into signals, the number of which is detected and evaluated. Since gamma rays are attenuated when penetrating matter, the sensor is able to calculate the level, the limit level, the density and the mass flow rate from the intensity of the received radiation.

Technical data

Non-repeatability	±0.1 % at -40 °C … +60 °C (-40 °F … +140 °F)
Ambient, storage and transport temperature	-40 °C … +60 °C (-40 °F … +140 °F) Extended range available
Voltage supply	
Operating voltage	20 … 72 V DC; 20 … 253 V AC, 50/60 Hz
Max. power consumption	4 W; 6 VA
Analogue input	
Input type	4 … 20 mA passive
Internal load	250 Ω
Switching input	
Input type	
– Open Collector	10 mA
– Relay contact	100 mA
Relay output	
Switching voltage	max. 253 V AC/DC
Switching current	max. 3 A AC (cos phi > 0.9), 1 A DC
Breaking capacity	min. 50 mW, max. 750 VA AC, 40 W DC (with U < 40 V DC)
Current output	
Range	4 … 20 mA/HART, active or passive
Max. load	500 Ω (300 Ω with intrinsically safe IS)
Switching output	
Type of output	NPN transistor output (floating)
Switching voltage	< 55 V DC
Load current	< 400 mA
General data	
Weight	4.5 kg (10 lbs.)
SIL qualification	Optionally up to SIL2

Materials/Scintillator

Sodium iodide (NaI) is used as scintillation material.

Housing versions

The housing is available as double chamber version of Aluminium or stainless steel in protection class IP66/IP67.

Electronics versions

The instruments are available in different electronics versions. Apart from the four-wire electronics with 4 … 20 mA/HART, two purely digital versions with Profibus PA and Foundation Fieldbus are possible.

Approvals

Worldwide approvals are available for VEGA instruments, e.g. for use in hazardous areas, on ships or in hygienic applications.

The technical data in the respective safety instructions are valid for approved instruments (e.g. with Ex approval). In some cases, these data can differ from the data listed herein.

You can find detailed information on the existing approvals with the appropriate product on our homepage.

Adjustment

The adjustment of the instrument is carried out via the optional display and adjustment module PLICSCOM or via a PC with the adjustment software PACTware and corresponding DTM.

The Bluetooth version of display and adjustment module enables a wireless connection to standard adjustment units. This can be for example a PC with PACTware and Bluetooth USB adapter.

Here, the adjustment is carried out via the adjustment software PACTware and the respective DTM.



Electrical connection

Two connection chambers are available. Depending on the instrument version, the signal output is either in the primary or in the secondary chamber.

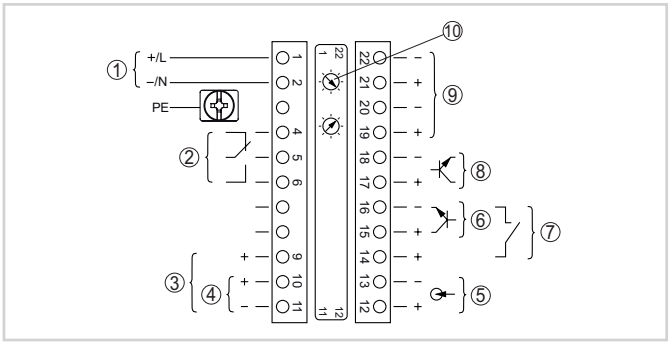

Primary terminal connections

1 *Voltage supply*
2 *Relay output*
3 *Signal output 4 … 20 mA/HART active*
4 *Signal output 4 … 20 mA/HART passive*
5 *Signal input 4 … 20 mA*
6 *Switching input for NPN transistor*
7 *Switching input floating*
8 *Transistor output*
9 *Interface for sensor-sensor communication (MGC)*
10 *Setting the bus address for sensor-sensor communication (MGC)*

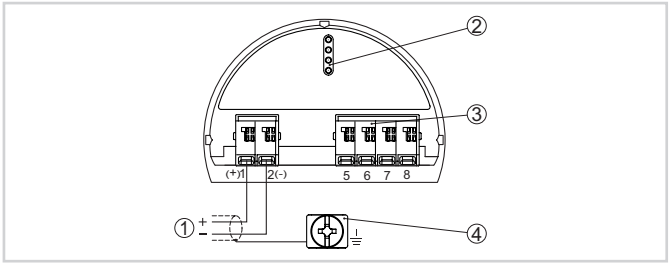

Secondary terminal connections (intrinsically safe devices)

1 *Terminals 4 … 20 mA/HART signal output*
2 *Contact pins for the display and adjustment module or interface adapter*
3 *Terminals for the external display and adjustment unit*
4 *Ground terminal*

Dimensions

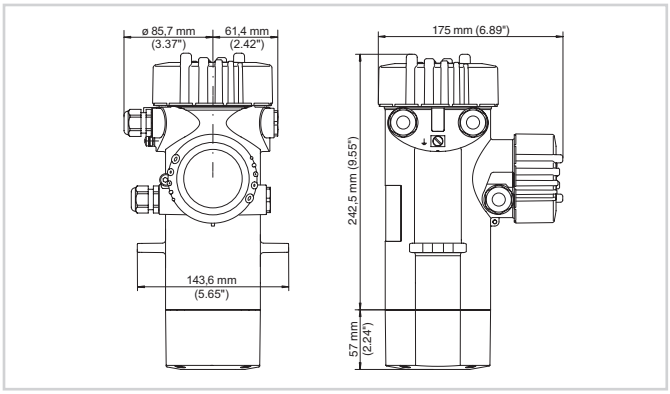

Dimensions MINITRAC 31

Information

You can find further information on the VEGA product line on our homepage.

In the download section on our homepage you'll find operating instructions, product information, brochures, approval documents, instrument drawings and much, much more.

Software accessories such as the current device software and the appropriate operating software are also available there.

Instrument selection

On our homepage under "*Products*" you can select the suitable measuring principle and instrument for your application.

There you will also find detailed information on the available device versions.